kolpa·san by KOLPA

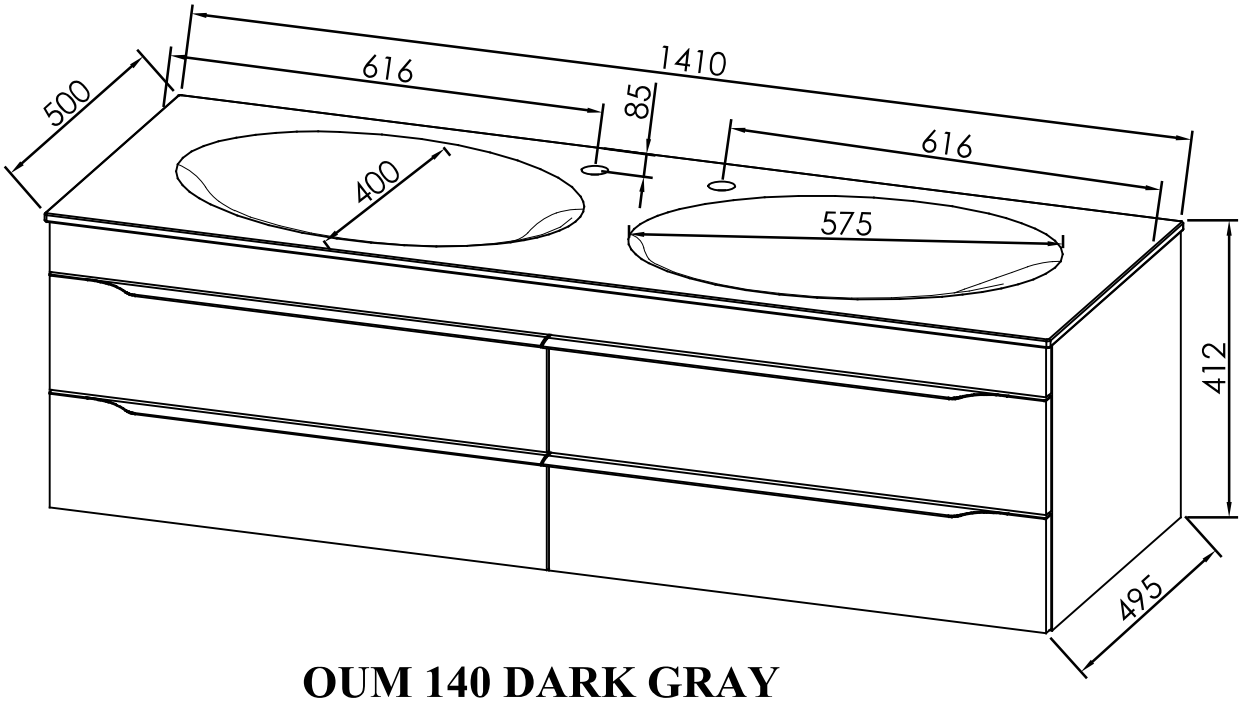

OUM 140 DARK GRAY
OUM 140 NATUR OAK

SPODNJI DEL SIFONA PRILOŽEN PRI OMARICAH
THE LOWER PART OF THE SIPHON WITH CABINET

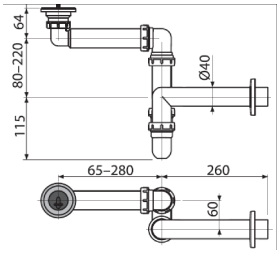

ZGORNJI DEL SIFONA PRILOŽEN PRI SKLEDAH
UPPER PART OF THE SIPHON WITH BASIN

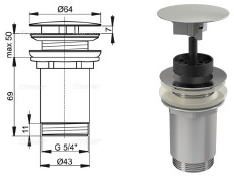

MALAYA
OUM 140